UNITED ORTHOPEDIC®

UCP™ Stem

Femoral Hip System

UCP Stem –

The UCP (United Cemented Polished) Stem can be used in both primary and revision hip arthroplasty. Its cement-friendly design combines tri-tapered geometry and polished surface to help facilitate the prevention of cement failure by reducing bone-cement interface stresses.

Various insertion depth options in the UCP Stem allow the surgeon to balance leg length with ease. The stem is available with offset variants and stem length options to attend to a wide variety of clinical challenges.

Tri-tapered Geometry

- Designed for optimal cement fixation and increased torsional stability

Adjustment Markers

- Assist the surgeon in adjusting insertion depth of the stem to help achieve optimal leg length

Forged Cobalt Chrome

- Increased mechanical strength

Centralizer

- Allows stem creeping to stable position

Cement Restrictor

- Prevents cement leakage

12/14 Neck Taper

- Accommodates a complete selection of femoral heads

Standard and High Offset

- Designed to allow optimization of soft tissue tensioning and joint stability

Polished Surface

- Helps minimize friction at the stem-cement interface and reduce the potential for cement failure

- For primary cases: Standard stem 125 mm length
- For revision cases: Long stem options in 180 mm, 210 mm, and 230 mm lengths

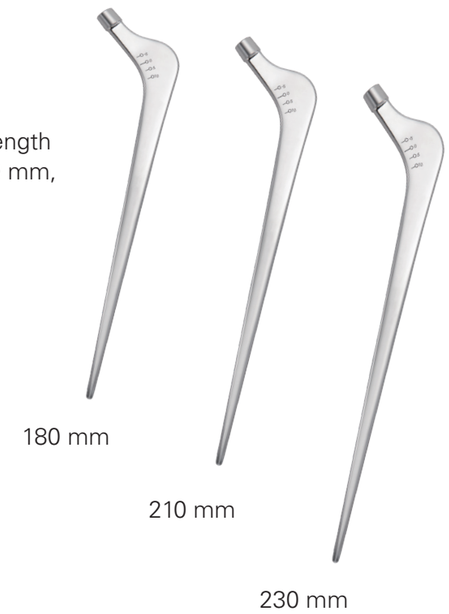

180 mm

210 mm

230 mm

Order Information

		Catalog Number		Description	
Standard	**High Offset**	**Standard**	**High Offset**	**Size**	**Medial Length**
		1107- 3000	1107- 3200	# 0	110 mm
		1107- 3010	1107- 3210	# 1	125 mm
		1107- 3020	1107- 3220	# 2	125 mm
		1107- 3030	1107- 3230	# 3	125 mm
		1107- 3040	1107- 3240	# 4	125 mm
		1107- 3050	1107- 3250	# 5	125 mm

	Catalog Number	Description	
Long Stem		**Size**	**Medial Length**
	1107- 3421	# 2	180 mm
	1107- 3431	# 3	180 mm
	1107- 3432	# 3	210 mm
	1107- 3433	# 3	230 mm

	Catalog Number	Description	
Centralizer	**Restrictor, I-Type**	**Restrictor Size**	**Canal size**
	1907- 3008	# 8	8 - 9 mm
	1907- 3010	# 10	10 - 11 mm
	1907- 3012	# 12	12 - 13 mm
	1907- 3014	# 14	14 - 15 mm
	1907- 3016	# 16	16 - 17 mm
	1907- 3018	# 18	18 - 19 mm

*The Centralizer and the Cement Restrictor come in one package.

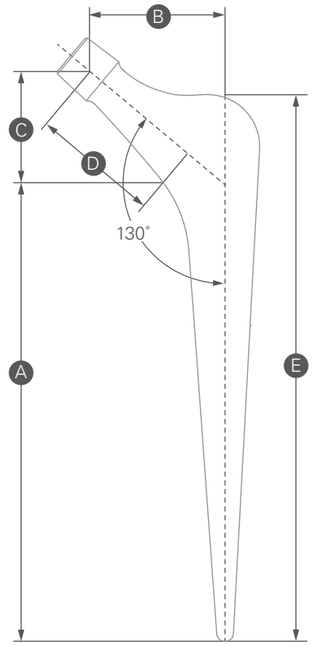

Size	A Medial Length	B Offset		C Vertical Height	D Neck Length		E Lateral Length
		Standard	High Offset		Standard	High Offset	
#0	110	32	37	29	41.8	48.3	132
#1	125	34	39	29	44.4	50.9	147
#2	125	36	41	29	47.0	53.5	147
#3	125	37	42	29	48.3	54.8	147
#4	125	38	43	29	49.6	56.1	147
#5	125	40	45	29	52.2	58.7	147
Long Stem							
#2	180	41		29	53.5		202
#3	180	42		29	54.8		202
#3	210	42		29	54.8		232
#3	230	42		29	54.8		252

Unit: mm

Please note that all United Orthopedic Corporation product brochures have been authored in the English language. Any translations into other languages have not been reviewed or approved by United Orthopedic Corporation and their accuracy cannot be confirmed. Any questions regarding United Orthopedic Corporation products should be directed to United Orthopedic Corporation at unitedorthopedic.com/contact

The CE mark is valid only if it is also printed on the product label.

CE 2797

UNITED ORTHOPEDIC®

© 2022 United Orthopedic Corporation. UOC-BR-UN-00007 Rev.1 APR. 2022